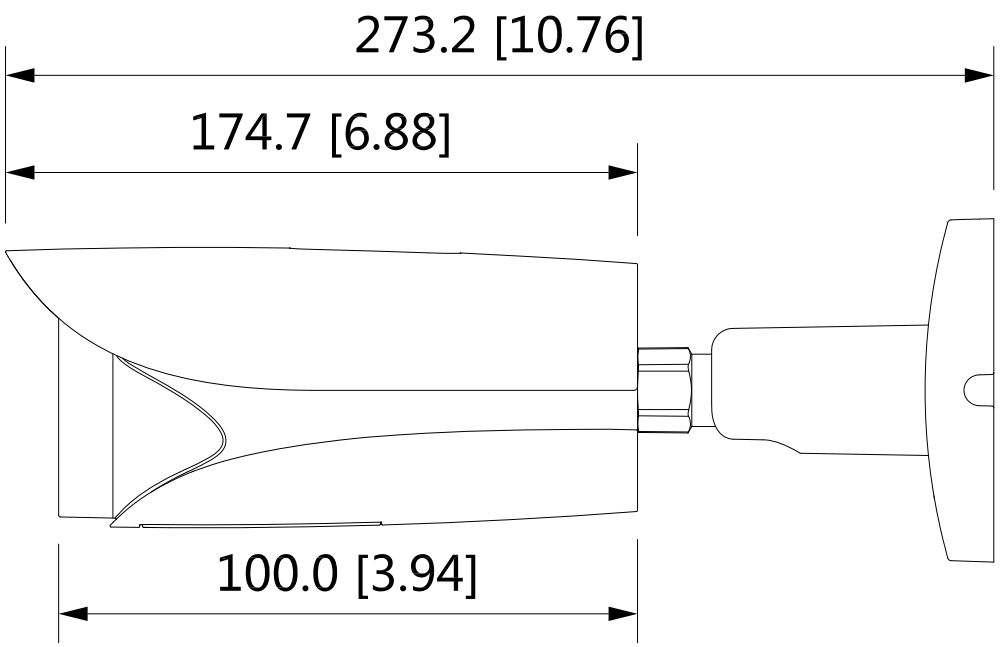
273.2 [10.76]
174.7 [6.88]
100.0 [3.94]

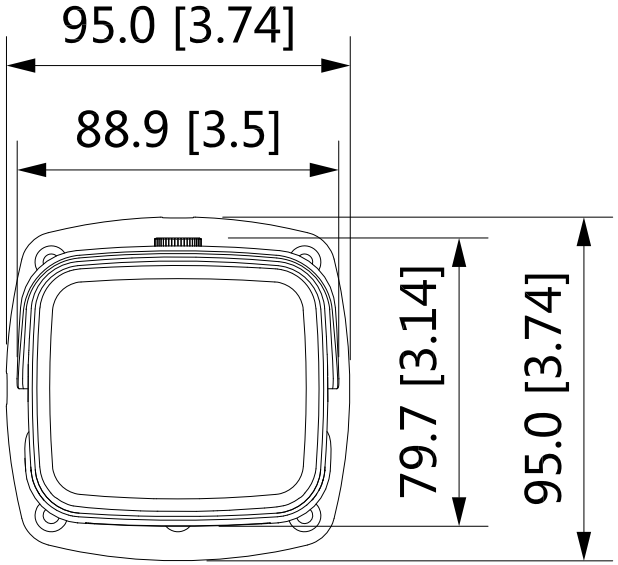
95.0 [3.74]
88.9 [3.5]
79.7 [3.14]
95.0 [3.74]

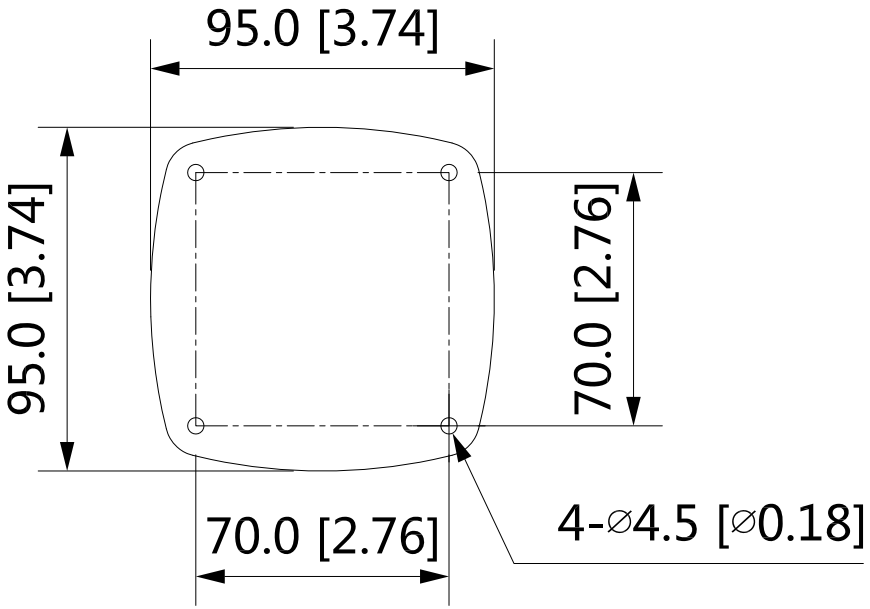
95.0 [3.74]
95.0 [3.74]
70.0 [2.76]
70.0 [2.76]
4-⌀4.5 [⌀0.18]